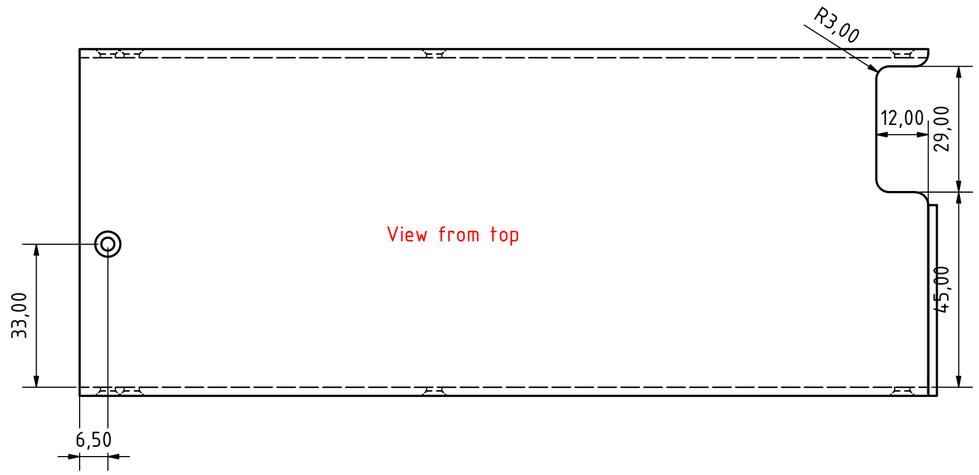

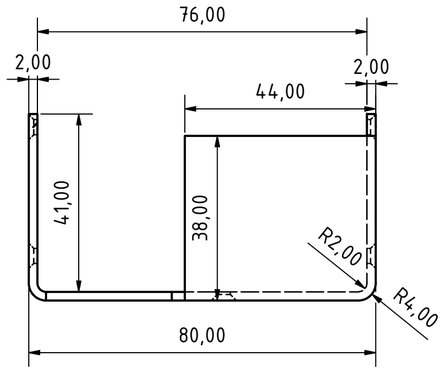

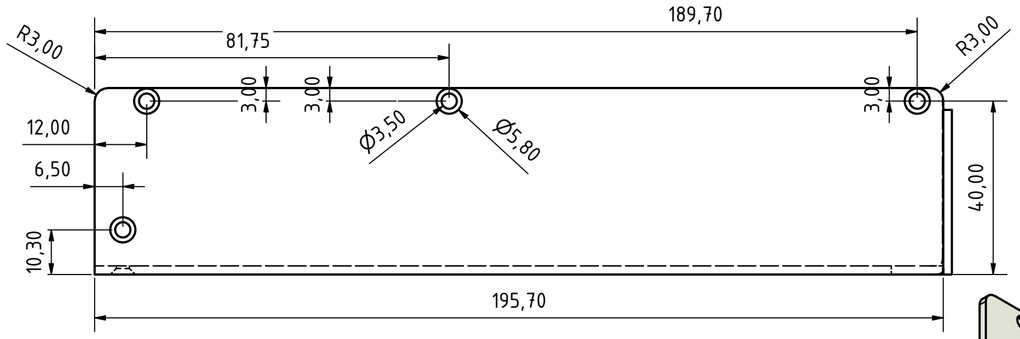

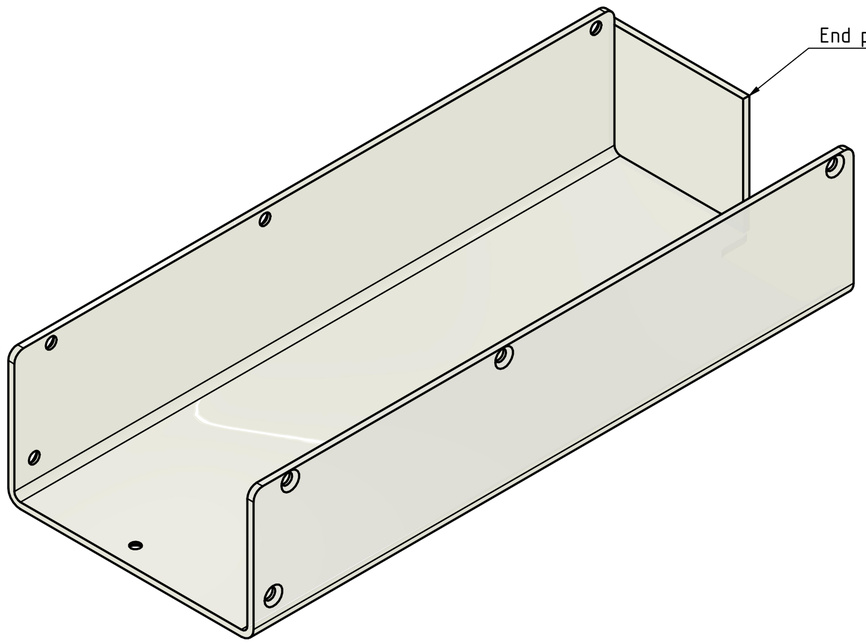

End piece needs to be manufactured and glued as last step.

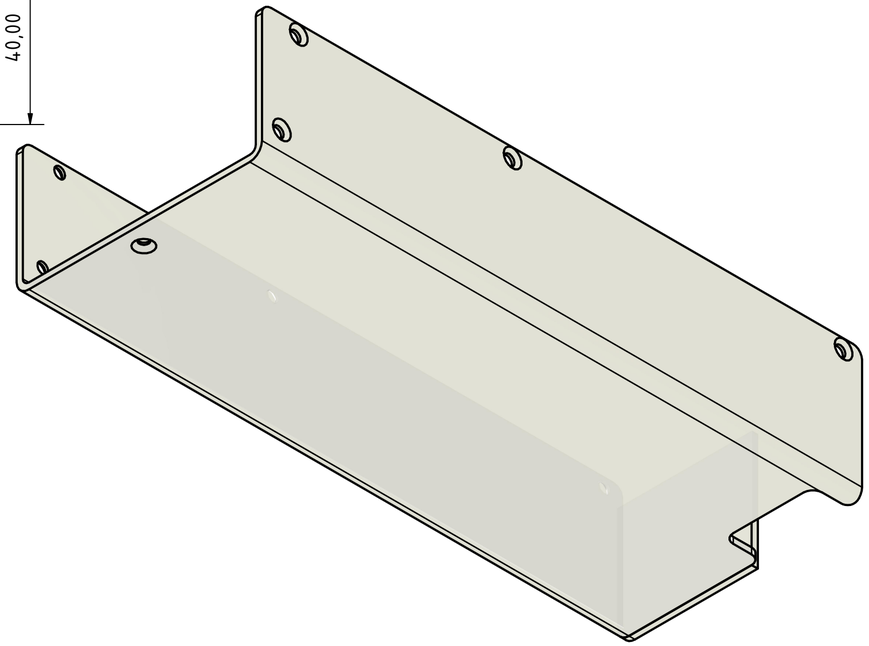

					Date	Name
				Drawn	24.10.2023	wernegger
				Checked		
				Standard		
State	Changes	Date	Name			

HO100003073

1

A2